MEE342: Light Work Phase 2 Report

February 25, 2026

Brandon Despain, Dean Puckett, Alexander Belevich, Robert Halloran, Andrew Ysteboe,

Kai Becker, Lucas Rounds

Overview

This overview analyzes the design of a swing arm desk lamp, with the goal of being able to provide stable, adjustable lighting by using a bar linkage system. The lamp arm uses square hollow beams and double-shear joints to ensure a rigid structure. Using tension springs, the gravitational load of the lamp is counteracted via restoring torques generated by the springs. This would allow for the lamp head to remain still within its arc of motion. To ensure the lamp longevity, failure modes were identified, with two prominent ones being spring fatigue and pivot point cracking. To counteract these prominent failures, there are several contingencies to prevent failure, including the usage of high quality materials and double-shear joints. Finally, there are several critical design parameters that the project revolves around. Optimizing linkage lengths, spring constant values, and component masses are all necessary to successfully design this project. Relevant CAD figures of the lamp's final design are included below:

3D View

Exploded View

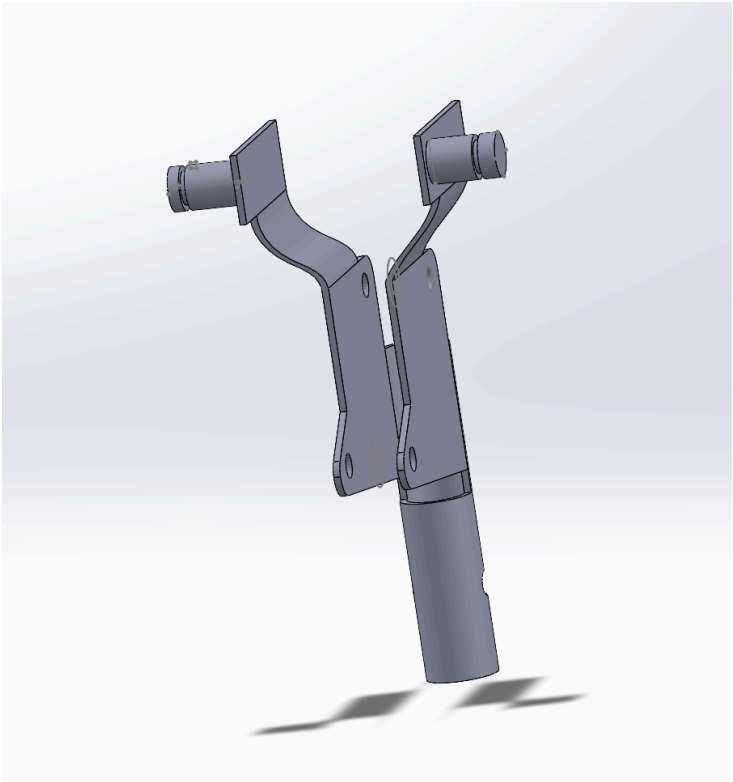

Lamp Base Holder

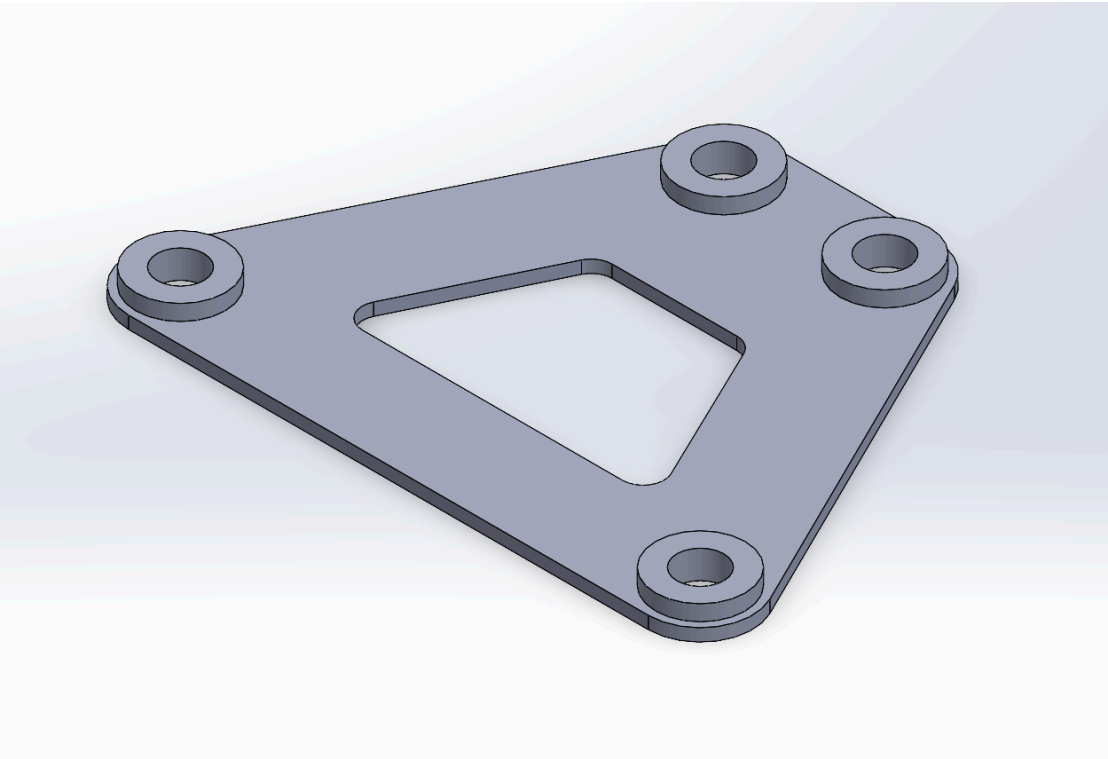

Lamp Middle Bracket x 2

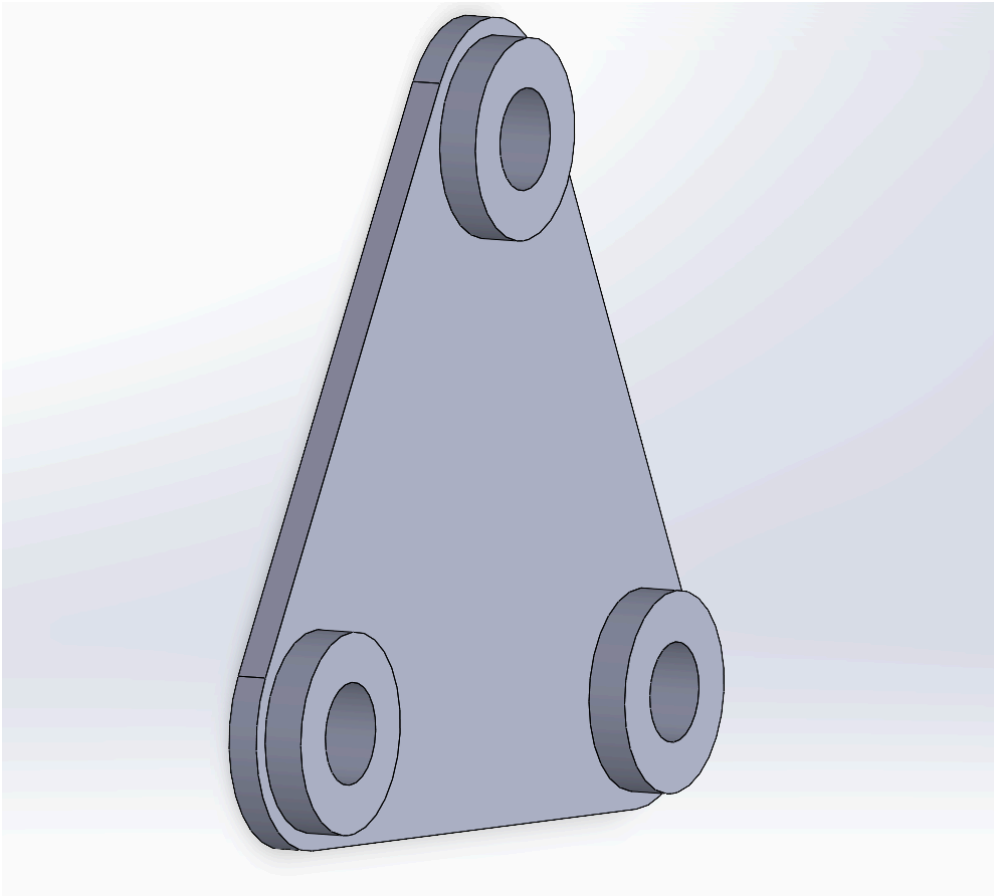

Lamp Top Bracket

Lamp Head

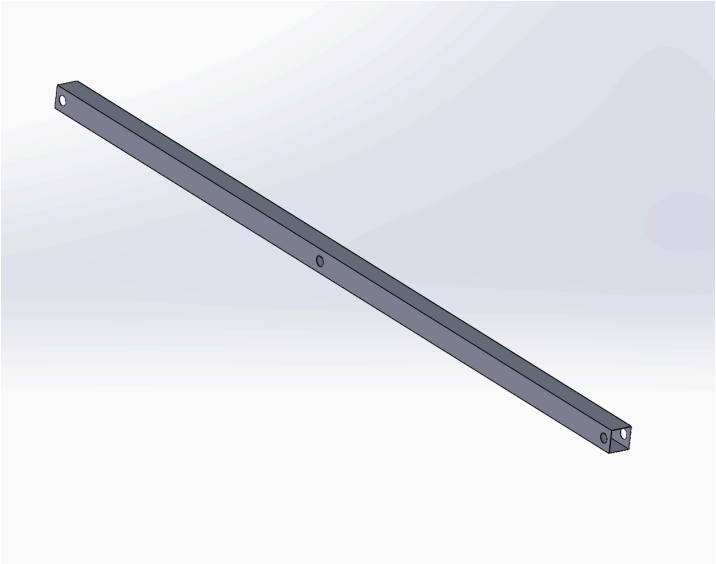

Connected Spring Arm x 2

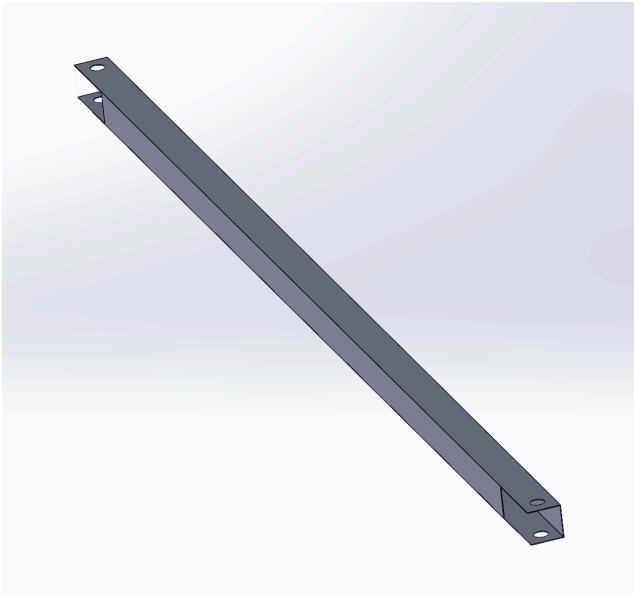

Top Side Arm x 2

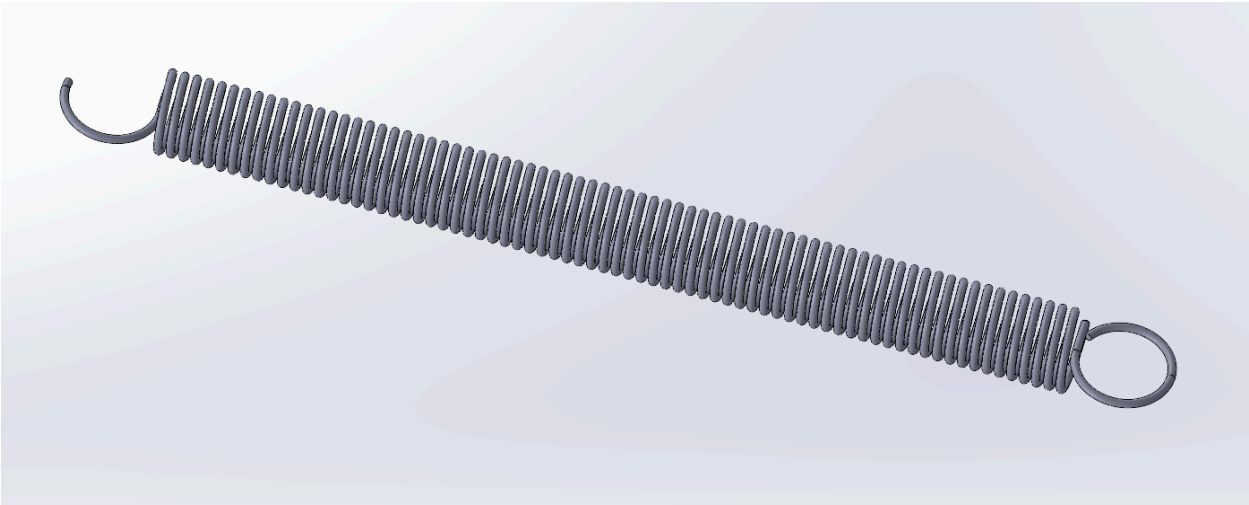

Spring x 4

Major Design Decisions

While the design of our lamp project has largely remained very similar to its concept in Phase 1, one major change that we did was increasing the width of the base. In our original design, we failed to consider the details of how wide we wanted our base to be and omitted obtaining the corresponding dimensions. During the second phase, while designing the CAD model, we realized that our initial design for the base might not be satisfactory to keep the lamp from tipping over, so we decided to increase the base diameter to 7 inches in order to provide more stability. Additionally, we realized that we had our base being made out of aluminum just like the rest of our parts, but after further research we realized that aluminum would be too light of a material and to use a more suitable material that is considerably heavier, such as concrete or cast iron.

Another design change we had was straightening out our base bracket. Originally the bracket was slightly angled, but upon assembling the CAD model, we realized that it complicated the assembly a lot, and needed to be changed. The base bracket was then modified to straighten out, which made fitting the screw through it significantly easier, and it did not angle any of the arms. Ultimately it was a poor decision to have it be angled, and we learned through trial and error on how to alter it in order to ensure a perfect fit for the bracket arms.

Analyses

Static Structural Analysis - Lower Spring Arm

The lower spring arm in this system is subjected to the most stress as a result of its positioning within the system. The spring which attaches to this arm and the base requires the strongest force as it must balance out the moment created by the weight of the entire structure.

Modeling the arm in Ansys using 6061 Aluminum Alloy as the material allows us to accurately predict the arms performance under loading conditions (symmetry about two axes was used for simplicity and simulation speed). In order to ensure maximum safety a spring force on the arm attachment (inside of hole where peg sits) of 17N was used as well as a 7.633N compressive axial force and a 0.405N shear force were applied on the arm-bracket attachment surface (inside of hole where peg attaches). These forces result from the weight of the components above the arm including the other arms, the lamp head as well as brackets and some pins. These forces were calculated assuming a horizontal upper arm which results in the maximum amount of force to be subjected onto the arm. Additionally a remote displacement was used to simulate the pin support from the arm to the base.

Using Ansys equivalent stress and total deformation were analyzed as well as a factor of safety for the equivalent stress was obtained to ensure the integrity of the arm is maintained. From the total deformation analysis a maximum deformation of 0.043mm was found at the hole edge on the top of the arm. This value is small enough that it is negligible especially considering this under slightly more than maximum possible loading. The equivalent stress analysis (below) verifies a maximum equivalent stress of 51.69MPa at the hole edge of the support attachment location.

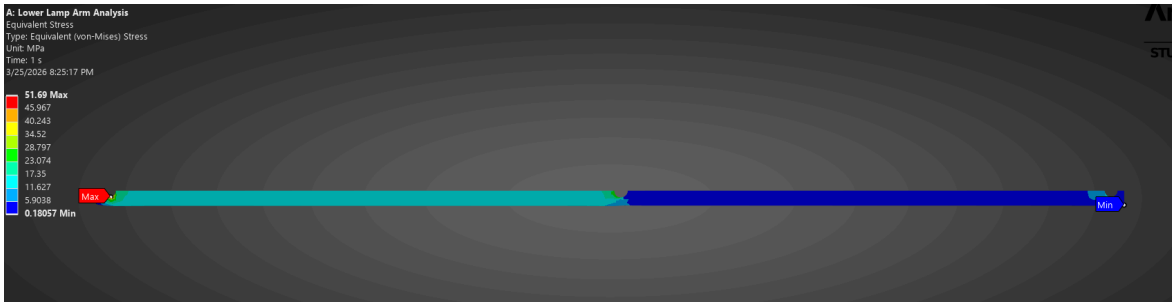

This is well within allowable stress as the 6061 Aluminum Alloy used has a yield strength of 280MPa. Lastly the factor of safety calculated in Ansys reached a minimum of 5.42 meaning the arm is in no danger of permanent deformation if used properly.

<u>Fatigue Assessment - Spring</u>

The springs in this system have a spring constant of 500 N/m, and the springs on the bottom have the potential for the greatest ratio of minimum stress to maximum stress making them a better option for fatigue analysis. The length of the spring is 97mm, and for the bottom set of springs the range of lengths of 130mm to 120mm from the normal movement of the lamp arms. This gives a maximum and minimum possible force of 16.5 N and 11.5 N respectively. To find the alternating and mean stresses from these values we must use $\tau = 8FC/\pi d^2$ where C = D/d where D is the outer diameter subtracted by the wire diameter (d). Knowing that D = 10mm and d = 1mm, the maximum and minimum stresses are 420.2 MPa and 292.8 MPa respectively. This leads to finding the alternating stress ($\tau_a = (\tau_{max} - \tau_{min})/2$) and mean stress ($\tau_m = (\tau_{max} + \tau_{min})/2$) which are 63.7 MPa and 356.5 MPa respectively.

The factor of safety against fatigue can be found using Ansys. Using the Goodman mean stress theory, setting the maximum load to 16.5 N on one loop of the spring with a fixed support on the other, and making sure that the loading ratio is set correctly to reflect the 11.5/16.5 N cycle the spring can endure, the spring is found not to have infinite life. The factor of safety against fatigue is .94471 meaning that it is susceptible to failing due to fatigue but with this value's proximity to one it will take tens of

thousands of cycles, which are already infrequent in the use of a lamp.

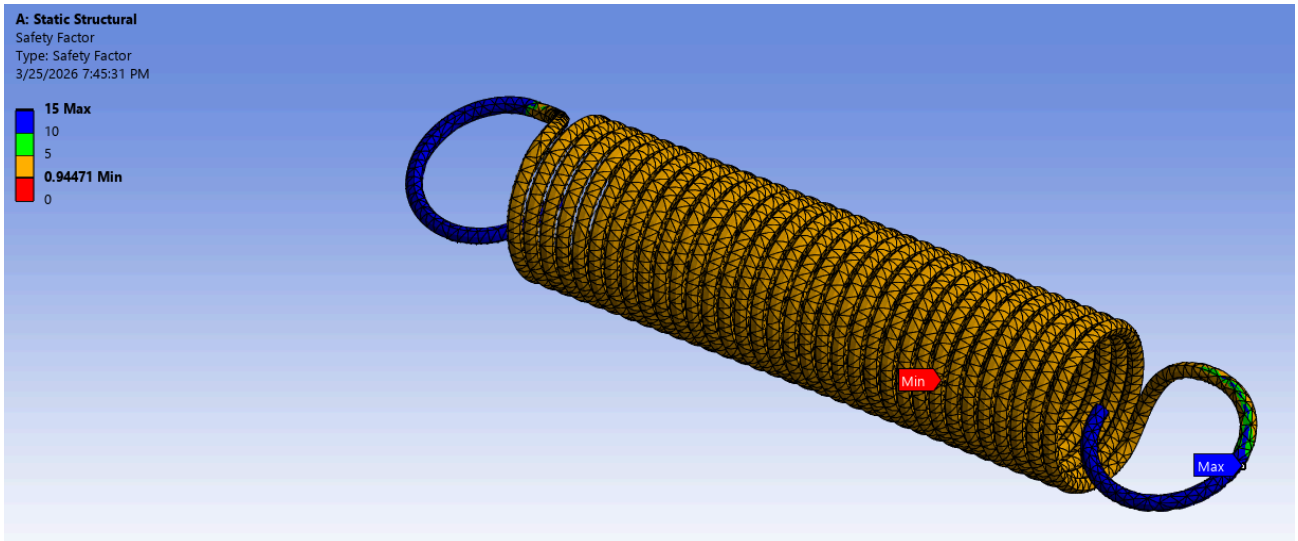

For this phase, a static structural analysis was utilized for the main body components of the lamp, such as the arms and central bracket. The bending stresses, deformation, and safety factor of those components was analyzed by using a remote force to simulate the force exerted by the lamp head upon the arms and bracket. Fatigue analysis was used to determine the life cycle of the spring and see how long it will last in the spring.

<u>Bearing Load Analysis</u>

In the worst case scenario for the bearings at the bottom of the lamp, it would be supporting the whole system while it is horizontal. The support used here is a screw going through an arm of the lamp and there are two of these. The total mass of the lamp's parts outside of the bottom bracket is 2.388 kg, which results in a reaction force of 23.4 N split between the two points. To be extra safe, assume all this load is on one screw, as well as the maximum spring force of 16.5 N which wouldn't be acting totally down in this case but can be for safety checking. This leaves a total reaction force on one screw which goes through one hollow arm at about 40 newtons. The point of failure here would be the force from the screw deforming the hollow arm, this stress can be found as $\sigma_b = P/A$ where our A is going to be the total thickness of the arm that is in contact with the screw which is 1mm * 2, multiplied by the diameter

of the screw which is 3mm. The area then comes out to be 6 mm^2 which then when you take the force divided by that value the stress comes out to be 6.67 MPa. The yield strength of 6061 aluminum is 280 MPa, meaning this absolutely maximal loading is far far under the required amount for any yielding. Thus it can be concluded that this bearing will have an infinite static lifespan.

Global Safety Overview

The bottom pair of springs is a critical point in this system, and has static and fatigue factors of safety of 3.0415 and .94471 respectively. There are no planned modifications for this despite the fatigue factor of safety indicating that it does not have infinite life. This is due to the nature of a cycle for this system. Movement from the minimum to maximum loading positions for the springs has to be done by the user, and they will still last tens of thousands of maximal cycles before yielding, meaning the lifespan relative to the expected timeframe of a cycle moves these pieces closer towards acting like they have infinite life.

The bottom bearings are another critical point in this system. In the worst case scenario where they must support the entire weight of the system if it is completely horizontal for example, it will do so without even reaching 5% of the required load for yielding to begin which would occur in a deformation of the lower arm in contact with the supporting screw. Yielding would take a force of over 1000N to occur. The factor of safety for this point is over 40 in an absolute worst case scenario.

The bottom spring arm is a critical component in this system for stress and deformation. This arm holds the most weight as a resultant moment caused by the weight of the other components. the other lower arm (wire arm) holds this moment as well but does not experience the added force from the spring. This arm has a factor of safety of more than 5 allowing for it to sustain the weight of the rest of the component as well as any added forces that may be applied by a user. Additionally that factor of safety was calculated with loadings slightly greater than even the worst case scenario (horizontal lamp positioning) so there is no realistic scenario where this arm would fail from regular use.

Discussion

Our team's lamp design was influenced heavily by the constraint of using 3D printing as the manufacturing method. Choosing the filament type was another factor, as it directly affects the lamp's durability and longevity. While PLA filament is simple for printing and is rigid, its brittleness in extreme temperatures makes it a less-than-ideal option for our lamp's material. PETG filament is considered a better option for critical, load-bearing components such as the arms and central bracket due to its higher toughness and resistance to cracking due to fatigue. This is especially true at joints/brackets and spring attachment points, since they go through the most wear.

To improve overall structural integrity, higher infill percentages and increased wall thicknesses will be used for the aforementioned load-bearing components. Printing orientation was another factor that had to be considered, with parts oriented so that loads are in line with the part's infill. Also, the design was designed to be modular and easy to assemble, using existing market fasteners and pins to connect components.

Another design factor that was accounted for was minimizing overhangs on parts to reduce the need for support material and improve print quality. Clearances were also taken into consideration to account for 3D printing tolerances and to ensure proper assembly. Overall, material selection, specific printing settings, and considerations for the lamp assembly have all influenced the design, ensuring the lamp design is manufacturable and structurally sound.

Risk Assessment

There are several plausible failure modes that may cause the lamp to cease functioning properly. The primary concern is spring fatigue. The springs, which are attached between the base housing and the arm of the lamp, function as a counterbalance to the force of gravity constantly weighing on the beam. This means that the spring is almost always under tension, and over time gradually loses its elasticity as it begins to stretch more and more. The end result is it stretching to a point where it's no longer able to bear the load and it breaks. One possible solution to this problem is to utilize springs made from stronger materials in order for the spring to have a longer lifetime. One material often used for such springs is carbon steel wire, which is a very resilient material due to its high elasticity and yield strength, making it a perfect material for springs that bear a constant load.

Another possible concern is structural damage. It is important to make sure that components of the lamp under stress do not crack or snap. In reality, a strong aluminum alloy would be considered ideal due to its ratio of strength to weight. However, due to the nature of this project, 3D printing is the only suitable method for producing parts for the lamp, so it is important to choose a suitable filament and to use a high infill percentage for the parts in order to ensure they are structurally sound and can support heavier loads. The frontrunner for filament choice is PLA filament, which is a popular filament for prototyping due to its rigid characteristics. Another viable option for this project is PETG filament as it has similar strength to PLA and has a higher temperature tolerance, meaning the lamp will function better in extreme temperatures.

A third possible failure mode that cannot be overlooked is pivot point cracking. Since the stress in the pivot points is the most concentrated, it can result in the area around the holes forming cracks and breaking apart. In order to combat this, it is important to avoid over-tightening of bolts as the over-torquing of bolts is the primary contributor to pivot point cracking. Additionally, adding spacers in between can help reduce the stress put upon the pivot points.